Part number

CQEYM 32

Male insert, CQEY series, AXYR® spring push-in terminal connection without tools, 32 poles + PE, 16 A 500 V 6 kV 3, size "77.27"

Product description	
Product type	Insert
Series	CQEY
Connection type	AXYR® high density spring terminal connection without tools
Gender	Male
N. of poles	32 poles + ⏚
Size	Size 77.27
Technical data	
Current	16 A
Voltage	500 V
Rated impulse withstand voltage	6 kV
Pollution degree	3
Rated voltage according to UL/CSA	600 V
Contact type	Turned silver plated
IP degree of protection	IP20 without enclosure, IP65/IP66/IP68/IP69 with enclosure
Further technical details	
Characteristics according to EN 61984	16 A 500 V 6 kV 3
Mating cycles	≥ 500
Insulation resistance	≥ 10 GΩ
Contact resistance	≤ 3 mΩ
Weight	109,50 g
Operating temperature range (min, max)	-40 °C ... +125 °C
Conductors stripping length	9...11 mm
UL 94 flammability rating	V-0

Material properties	
Main material	Polycarbonate (PC)
Other materials	Contacts: copper alloy
Colour	RAL 7032 grey
RoHs conformity	Compliant with exemption 6(c): copper alloy containing up to 4% lead by weight
China RoHs - EFUP	50
REACH SVHC substances	Yes Lead
General ordering information	
EAN13 code	8015747293129
eCl@ss 8.1	27440205
ETIM 7.0	EC000438
Packaging Information	
Packaging length	245,00 mm
Packaging height	165,00 mm
Packaging width	215,00 mm
Packaging weight	3,56 kg
Packaging volume	8,69 dm³
Packaging description	Carton box
Packaging quantity	30 Pcs
Packaging EAN code	8015747293136
Sub-packaging weight	0,12 kg
Sub-packaging description	Plastic bag
Sub-packaging quantity	1 Pcs
Sub-packaging EAN barcode	8015747293716

Part number

CQEYM 32

Catalogue drawings

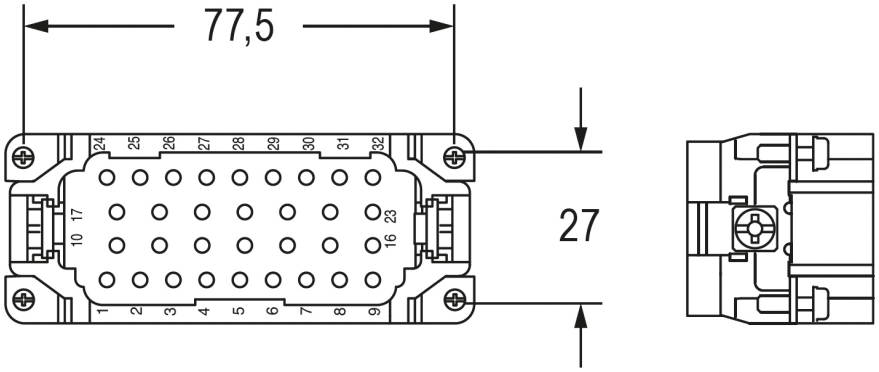
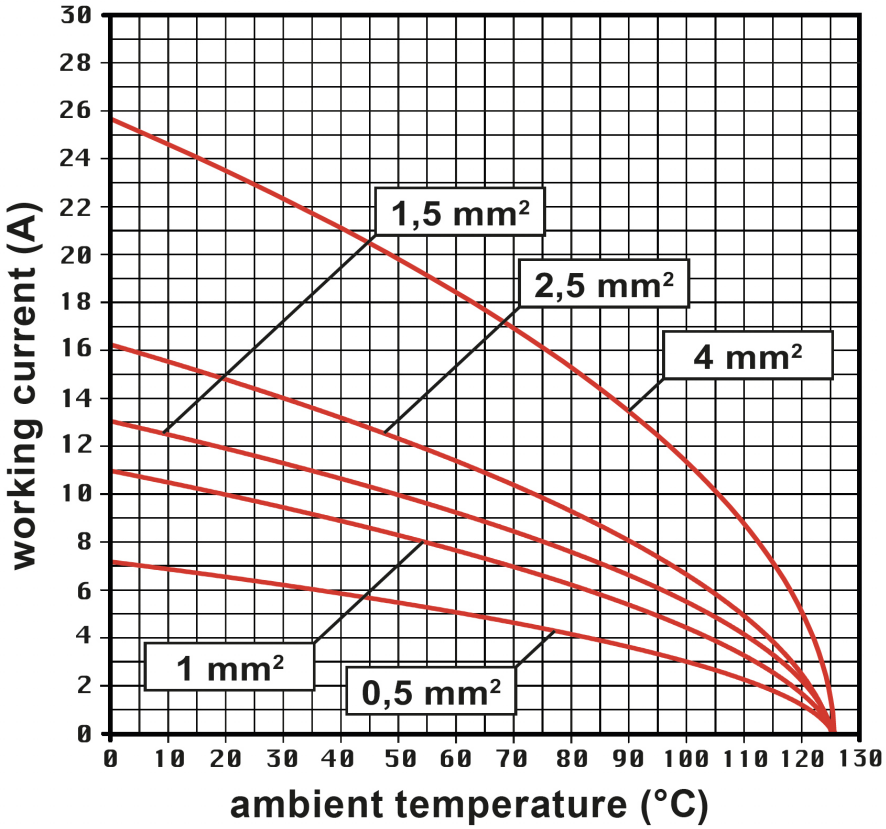
Derating curves